How Sustainability is Growing Southland

Presentation to "Commercial Biomass Boiler " Symposium GHG Reduction Challenge
by Stephen Canny, Venture Southland

Venture Southland
www.venturesouthland.co.nz

The Southland Case Study

Objectives

- **Reduce GHG Emissions** and support energy sources that reduce particulate emissions
- **Provide Advice** and technical support for businesses wishing to change
- **Create Awareness** of sustainable energy options
- **Develop Feasibility Studies and Facilitate Funding** for feasibility studies, and in some cases capital grants and crown loans
- Evaluate systems, **build case studies** and develop business collaboration around energy efficiency and systems design
- **Build Confidence** in systems and the supply chain

Understanding the Opportunity to Convert Waste to Energy

Background

- Southland Energy Strategy 2005, and updated in 2012
- Dairy Energy Efficiency Assessment 2008
- 2010 Wood Energy Forum
- 2011 Wood Demand Assessment
- 2012 Waste to Energy Report – Regional Opportunities Identified
- 2015 Otago and Southland Forest Residue Supply Assessment

Projects

- Wood Energy South - Industrial Biomass Boilers
- Methane Recovery in the Dairy Sector
- Invercargill City Methane to Energy Project
- Electric Vehicles
- Renewable Energy on Stewart Island

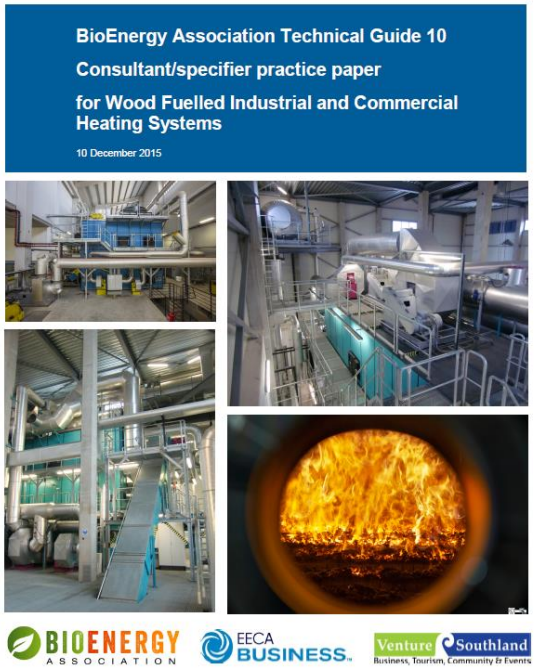

Why Southland?

Residue waste wood predicted for energy:

2015-2018: 180,000t pa
2019-2028: 320,000t pa
2029-2033: 450,000t pa
2034-2039: 500,000t pa
2040-2045: 580,000t pa

Predictions exclude mixed biomass options

- **Waste wood** includes sawmill waste, low value logs and unrecovered wood
- Limited range of alternative **thermal fuel** sources (declining coal quality and no natural gas)
- Significant failures in **existing boiler systems caused by poor quality fuels**
- A**ir plan changes** and compliance
- A desire to reduce GHG emissions

Wood Energy South Project

3 year project (2014-2017)
$1.5 mil EECA contribution
Reduce 195,000t of CO_2 emissions

Aims to:

- Utilise local waste wood
- Lower carbon emissions
- Improve air quality
- Demonstrate the cost and life-cycle benefits of wood fuelled heat plant systems
- Build industry knowledge and capability
- Build a woody biomass market

EECA BUSINESS™
PUTTING ENERGY TO WORK

WOOD ENERGY SOUTH

Current Conversion Examples

15 Biomass Boiler Systems now operating in Southland

Slinkskins Thornbury

Considerable requirement for thermal energy for use in a variety of processes and rising cost of LPG triggered a rethink on how to best meet the needs of the business.

Ministry of Education

As one of the cheapest, most efficient and environmentally friendly energy options, **wood fuel** is the Ministry of Education's preferred choice for heating in Otago and Southland.

Splash Palace

Environmental benefits and savings including reduced boiler supervision, maintenance and meets future clean air requirements.

Clean Air

An **optimised biomass boiler** produces low levels of harmful particulates

		>PM_{10}	PM_{10}	Condensable	Total
		(mg/m³, dry, 0°C, 1Atm)			
1 Invercargill Vekos (Coal converted to Wood Chip)	Boiler Un-scrubbed	910	420	540	1870
	Fresh Water Scrub	50	80	20	150

McCallums Group

- **Saving $323,000 p.a.** in fuel and rising as heat recovery efficiencies are achieved.
- **Further $14,500 saving p.a.** in boiler maintenance.
- **Carbon emissions reduced by approx. 1,426 tonnes/year.**
- **Results in a Competitive Business Model**

Methane Recovery

Methane that is captured and burnt reduces the **GHG effect by 25 times**

Venture Southland is working with farmers, EECA and NIWA to **streamline the process** and develop a general standard/specification for a **standardised** methane recovery system to generate **energy from dairy waste and metropolitan waste** treatment stations.

Core Objectives of the Methane Recovery System: Dairy Farm example

- Simple & reliable
- Fool proof
- Provides biological resilience
- Reduces emissions & retains nutrient on farm
- Provides heat and electricity
- Affordable
- System builds are repeatable

Methane Recovery

Anaerobic Digestion to Methane to Energy: Monitoring Project

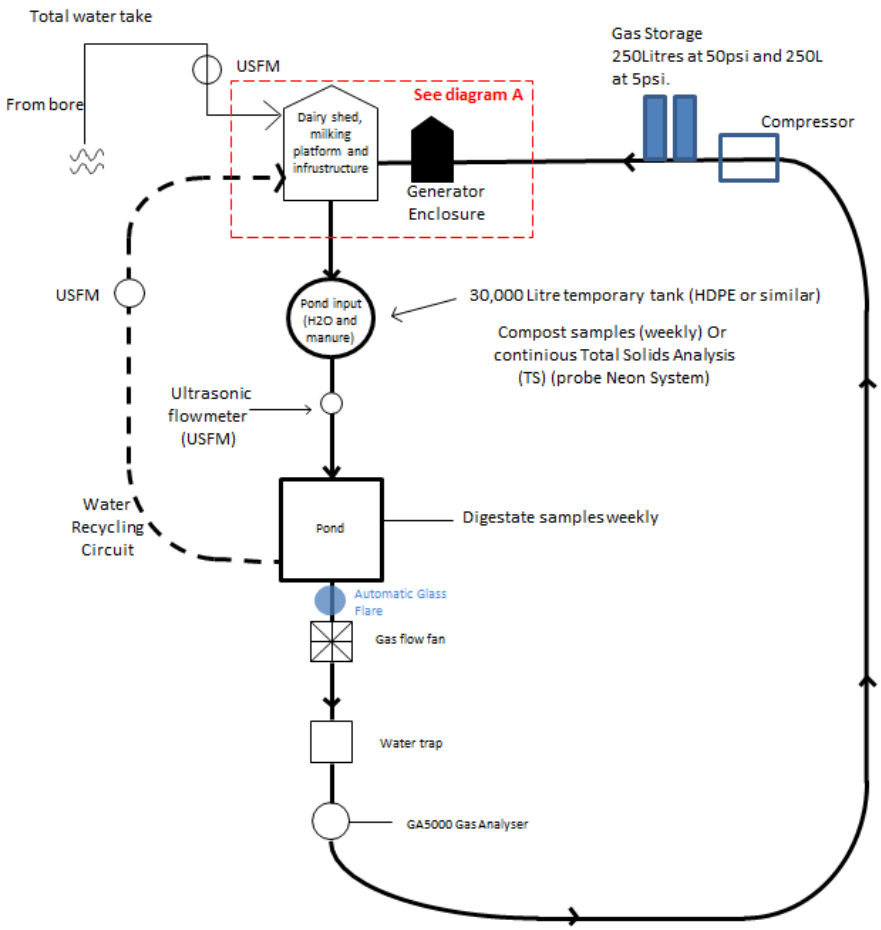

NIWA Taihoro Nukurangi

Venture Southland Business • Tourism • Community • Events

EECA BUSINESS PUTTING ENERGY TO WORK

DairyNZ

NZAS Aluminium Smelter

Why is Tiwai Smelter important from a national and global perspective?

- Tiwai Aluminium smelting emissions are the **lowest in the world at 1.9 tonnes of CO_2 per tonnes of Aluminium** produced
- The newest smelters in the world are producing **15 tonnes to 17 tonnes of CO_2** per tonne of aluminium produced
- **Efficient transport systems need lightweight aluminium** Airbus, EVs -Tesla, BMW, moist cell battery technology etc.
- Tiwai Aluminium Smelter is the **only high purity smelter in the world that is fuelled by renewable energy**

Electric Vehicles

- Venture Southland has had a Mitsubishi i-MiEV Electric Car for 3 years
- **57%** of all company trips are within the range of the **i-MiEV** (typical of an average SME 56% to 72%)
- Fuel costs per 10,000km are $**362** (**$1396** cheaper than a small petrol car **@ $1758**)

SPARKY

Mitsubishi i-MiEV Electric Car

100KM RANGE per charge

1110KG

6-8HRS to charge from flat

SEATS 4 ADULTS

57% of all company trips is within the range of the i-MiEV

ACCELERATES TO **80KM**

6% FASTER THAN A PETROL CAR

Reaches over 100 km/h

ANCAP

4 STAR SAFETY
6 AIR BAGS

3.67m

95% less oil used than a petrol car

Fuel Costs per 10,000km

ELECTRICITY	PETROL
$362	$1,758

Venture Southland
www.venturesouthland.co.nz

Renewable Energy on Stewart Island

- **Remote power supply systems** in many parts of New Zealand rely heavily on **diesel generation**
- Stewart Island uses diesel generation at a cost of **$0.65 per KWhr**
- Wind, solar, run-of-stream hydro and electric vehicles are being assessed to substitute high emissions fossil fuel generation while potentially **reducing electricity costs to $0.35 per KWhr**

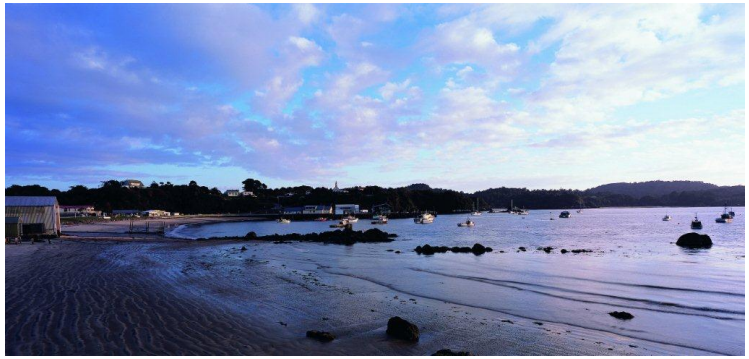

Aquaculture

LIFE CYCLE ANALYSIS - CARBON FOOTPRINT FROM FOOD

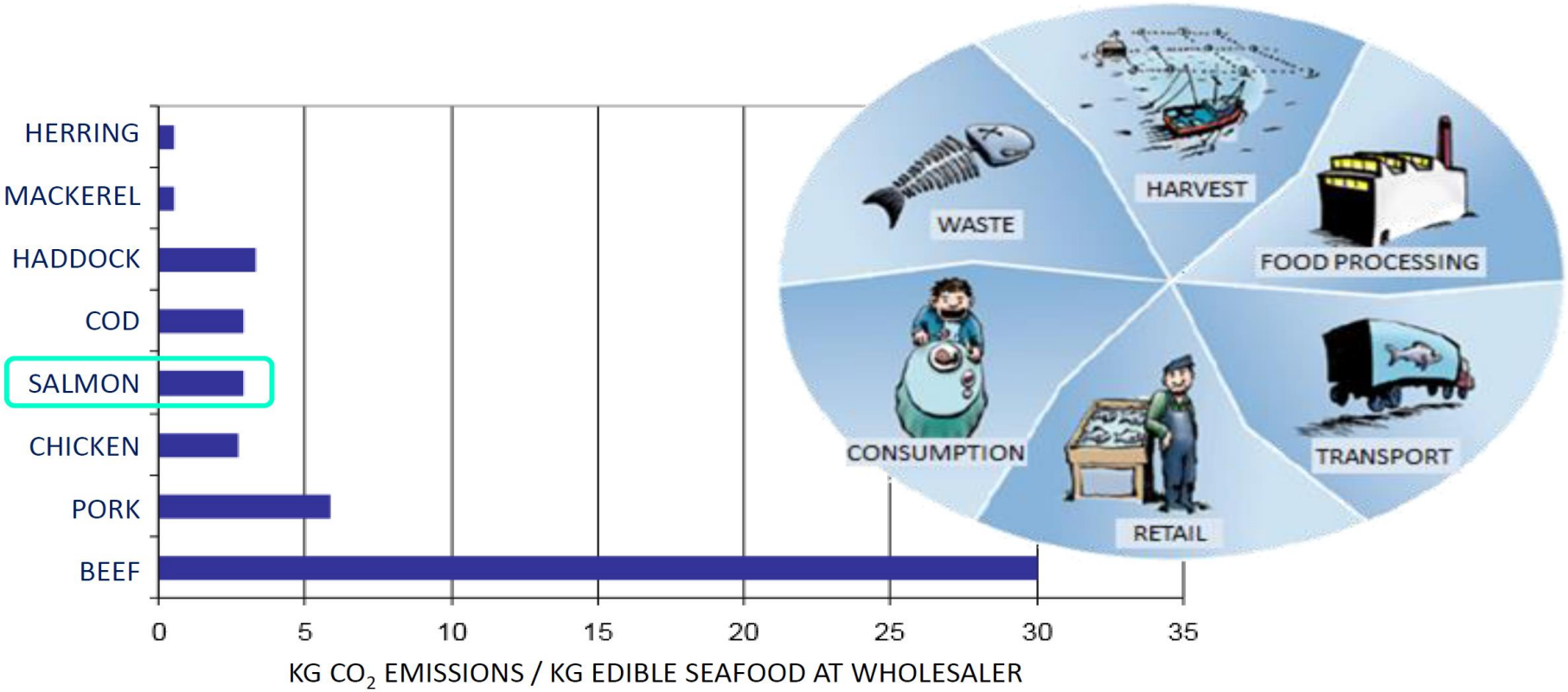

Source and illustration: Cederberg et al 2009, Winther et al 2009 (SINTEF, NTNU and SIK).

BELLONA

Venture Southland
www.venturesouthland.co.nz

Empowering Policy

- That all **state sector agencies be encouraged to take a lead;** as demonstrated by the Ministry of Education and adopt Energy Efficiency and the use of **biomass low emissions heating/boiler systems**
- That **regional emission reduction targets** be set rather than just national emissions reduction targets – resulting in a broader level of engagement and accountability
- **Resource Efficiency in Business** – Lean Programs
- **Enabling Aquaculture - Low Emissions Protein Production GHG Efficient**
- **Transmission Pricing Methodology that enables investment in renewable energy generation**
- It is important to **recognise that there is no one magic bullet to reduce Emissions - a multifaceted approach is required**

Can we meet Paris Emissions Reduction Targets?
Yes We Can!

QUESTIONS?

www.venturesouthland.co.nz
www.woodenergysouth.co.nz